THIS DRAWING AND DESIGN HEREON CONSTITUTES A PROPRIETARY DESIGN OF PACKARD ELECTRIC DIVISION AND IS NOT TO BE DUPLICATED OR REPRODUCED WITHOUT AUTHORITY OF PACKARD ELECTRIC DIVISION.

DO NOT SCALE

PART NO. 1206 6317

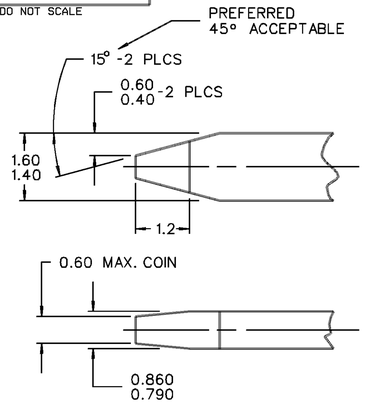

MATING TERMINAL INFORMATION

SCALE 16:1

RECOMMENDED MATERIAL:
P-1546 (CDA 210) - EXTRA SPRING TEMPER - TIN PLATED BRASS
PLATING THICKNESS: 0.003-0.005 MM
TENSILE STRENGTH: 430-480 MPa
USE OF A MATERIAL WITH A CONDUCTIVITY <20% IACS AT 68°F SHOULD BE APPROVED BY PACKARD ELECTRIC.

PART NO. 1206 6317

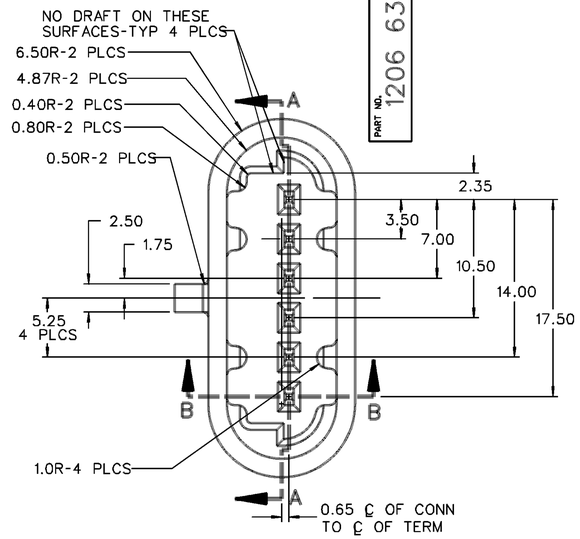

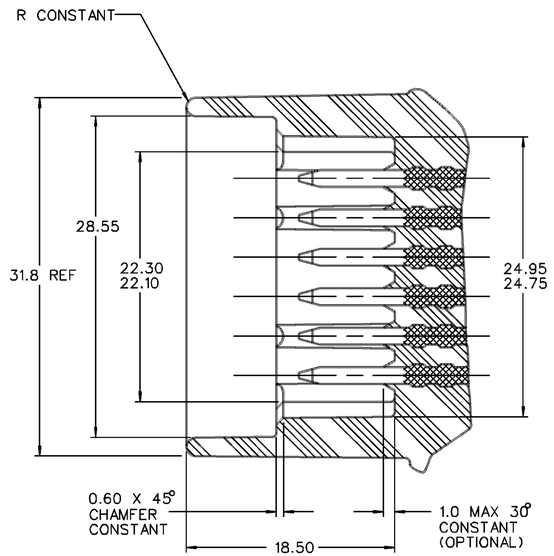

SECTION A-A

DATE	SYM	REVISION RECORD	AUTHORITY	DR	CK
02DE86	A	PART NO. WAS PE008367 AND			
		RELEASED	860005	EM	FH
15SE87	A1	ADDED NOTE #6	11565	EM	
03JA14	A2	ADDED LUBEWELL LUBRICANT NOTE	424998	JVR	KRM

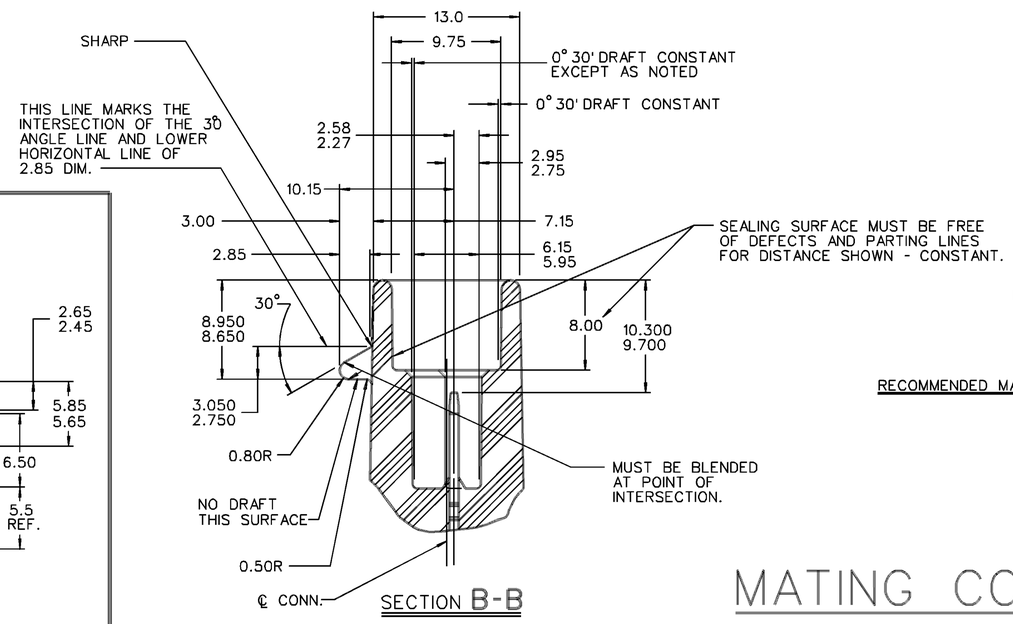

SECTION B-B

NOTES—
1. 1° DRAFT ON ALL OUTSIDE SURFACES, UNLESS OTHERWISE SPECIFIED.
2. DIMENSIONS ARE TO FACE OF VIEW SHOWN, UNLESS OTHERWISE SPECIFIED.
3. ALL RADII 0.40 UNLESS OTHERWISE SPECIFIED.
4. TERMINAL RETENTION FORCE 89.0 N MINIMUM.

RECOMMENDED MATERIAL— GLASS RIENFORCED NYLON OR POLYESTER.

MATING CONNECTOR INFORMATION

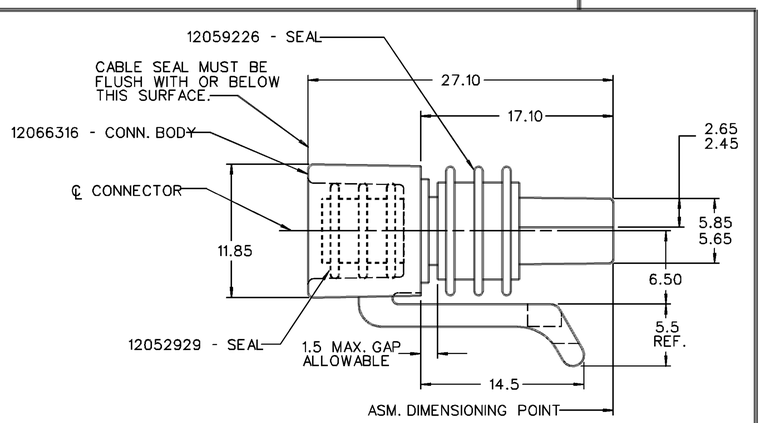

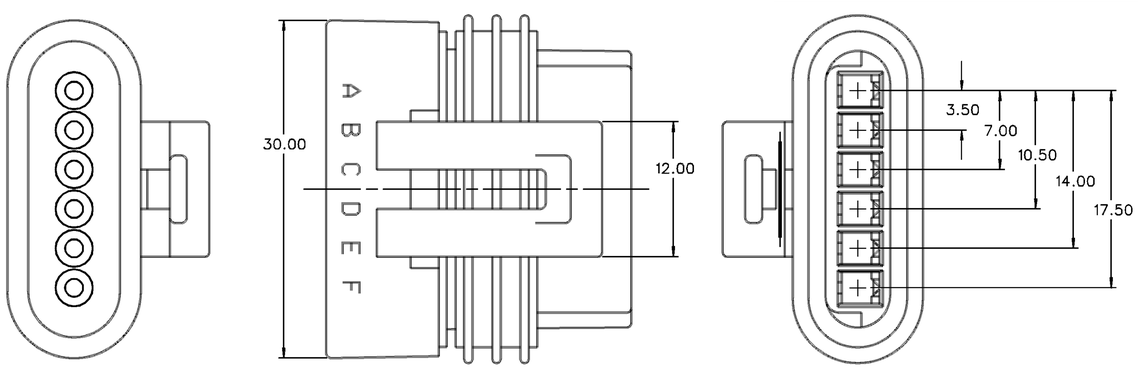

NOTES—
1. CAVITIES TO ACCEPT 12047680 TERMINAL OR EQUIVALENT.
2. WHEN PARTS ARE SHIPPED, THEY MUST BE PACKED IN PLASTIC BAGS OR SHIPPING CONTAINERS MUST BE LINED WITH PLASTIC LINERS . BAGS OR LINERS MUST BE SEALED TO AVOID ENTRY OF FOREIGN MATTER.
3. CONNECTOR TO ACCEPT 12059226 CONNECTOR SEAL OR EQUIVALENT.
4. CONNECTOR TO ACCEPT 12052929 CABLE SEAL OR EQUIVALENT.
5. MATING CONNECTOR ASM 12064915 OR EQUIVALENT.
6. SEALING CODE 3.
7. S-60-T LUBEWELL LUBRICANT CAN BE USED AS AN AUXILIARY SUPPORT ON THE CABLE INSTALLATION PROCESS.

PED/INTERGRAPH MICROSTATION

FILE SPEC: ####USER#### DGN#SPECIFICATION########### ######SYTIME######

THIRD ANGLE PROJECTION

METRIC
DIMENSIONS ARE IN MILLIMETERS UNLESS OTHERWISE SPECIFIED.

CODE NO. 6900

Q.C. -C-5110

TOLERANCE UNLESS OTHERWISE SPECIFIED
DECIMAL: ONE PLACE ± 0.3, TWO PLACE ± 0.15
ANGULAR ± 2°

DWG. DATE 18SE86 | SCALE 4:1 | DR. 18SE86

EST. NO. | CK. | DATE

REFERENCE NO. 12065143 | APPR. | DATE | APPR. | DATE

MATERIAL SPEC. SEE DWG.

NAME ASM. CONN 6F M/P 150 P2S

PART NO. 1206 6317 | SIZE D

PACKARD ELECTRIC DIVISION
GENERAL MOTORS CORPORATION
WARREN, OHIO

PACKARD ELECTRIC