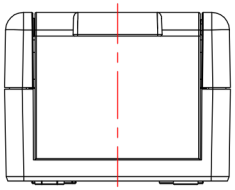

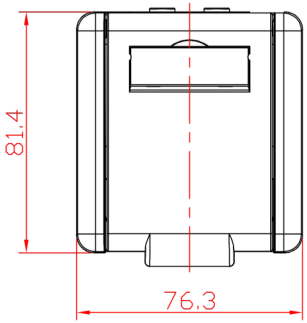

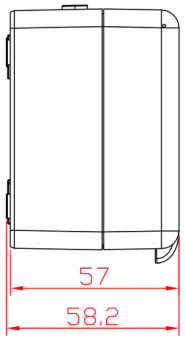

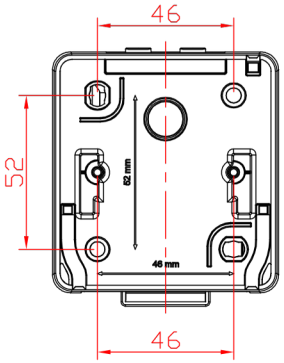

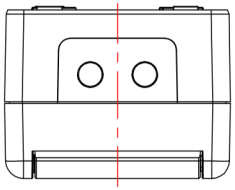

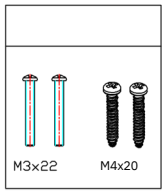

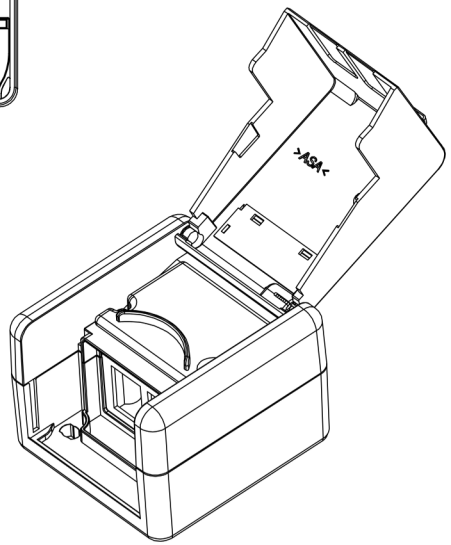

NOTES:
1.HOUSING MATERIAL:ASA

SYM	Number	Bill No.of Alteration	Signature	Date

Drawn			Tolerance
Checked			0.00–6.00 ±0.10 6.00–30.00 ±0.20 30.00–120.00 ±0.30 120.00– ±0.50 Angle ±30'
Approved			

Ma t erial				Item No.	20124904
Angles Projection	Size	Scale	Unit	Part Name	Surface Box 2 Ports Use for keystonejack
	A4	X:1	mm		
Sheet	1 OF 1	Version: A/0		ERP Part No.	