REV	DATE	DESCRIPTION
B		

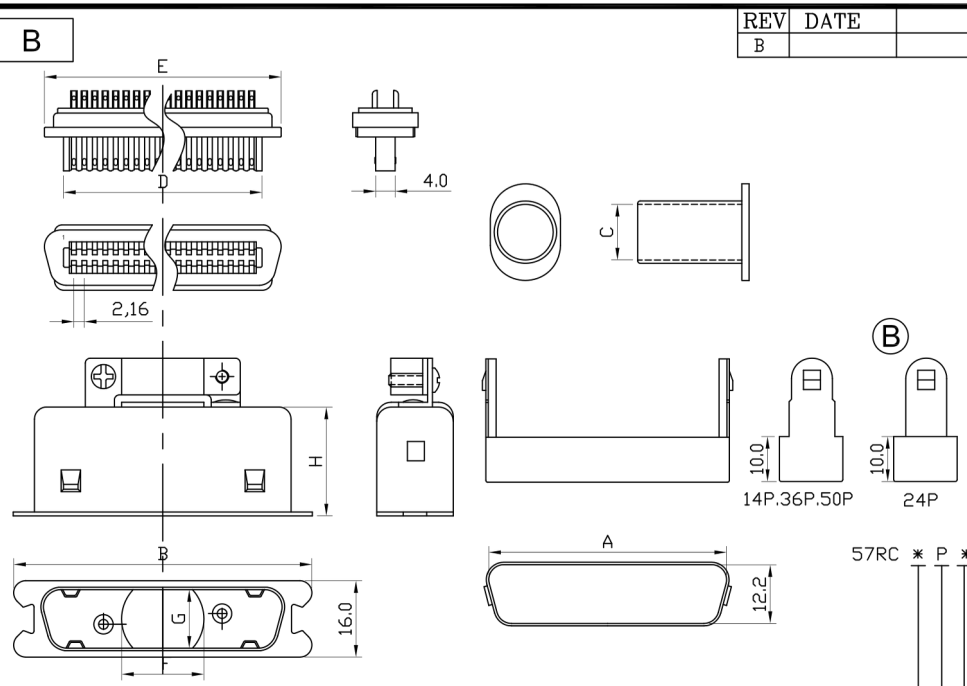

Material & finish
SHELL:
steel Zinc plated,Tin ploted
or Nickel plated steel
PIN CONTACT:
Phosphor bronze or brass
Gold Plated
INSULATOR:
PBT & Glass-fibre reinforced
UL-94-V0
CURRENT RATING:5Amp
DIELECTRIC STRENGTH:
1000V for one minute
INSULATOR RESISTANCE:
1000MΩ MIN.(at 500V DC)
CONTACT RESISTANCE:25mΩ Max. mated
TEMPERATURE:
-55°C to +105°C

57RC ✱ P ✱ ✱ ✱ 0 134-1

- FILE NO:001~1000
- CONTACT LENGTH(MM): 0:N/A
- SHELL: A: NICKEL PLATED
- CONTACT PLATING: A:GOLD FLASH B:3U " C:5U" D:10U" E:15U" F:30U"
- INSULATOR COLOR: B:BLUE K:BLACK
- CONTACT TYPE: P:PLUG S:SOCKET
- NO OF CONTACTS: 14 24 36 50

Positions	A±0.3	B±0.3	C±0.3	D±0.3	E±0.4	F±0.3	G±0.3	H±0.3
14	25.52	37.92	7.0	17.45	25.44	8.6	11.8	21.4
24	36.5	48.72	9.0	28.35	36.24	13.2	11.9	21.0
36	49.28	61.68	11.5	41.35	49.2	16.0	11.9	23.0
50	64.4	76.8	12.5	56.35	64.32	18.7	11.9	25.0

UNIT : mm

DIREKTRONIK

MODEL NAME:

SELECT TOL / DIM	1	2	3	EXTRA
0.000	0.05	0.05	0.10	
0.00	0.10	0.15	0.20	✓
0.0	0.15	0.25	0.30	✓
0.	0.25	0.30	0.40	✓
ANGLE	1.0°	3.0°	5.0°	✓

PART NO. 57RC✱P✱✱✱0134-1	
APPROVED BY:	FILE NO. FUY57134-1
CHECKED BY:	SCALE: 1 : 1
DRAW BY: jenny	DATE :

Document No.:FUYCONN-WI-020

2025.09.17